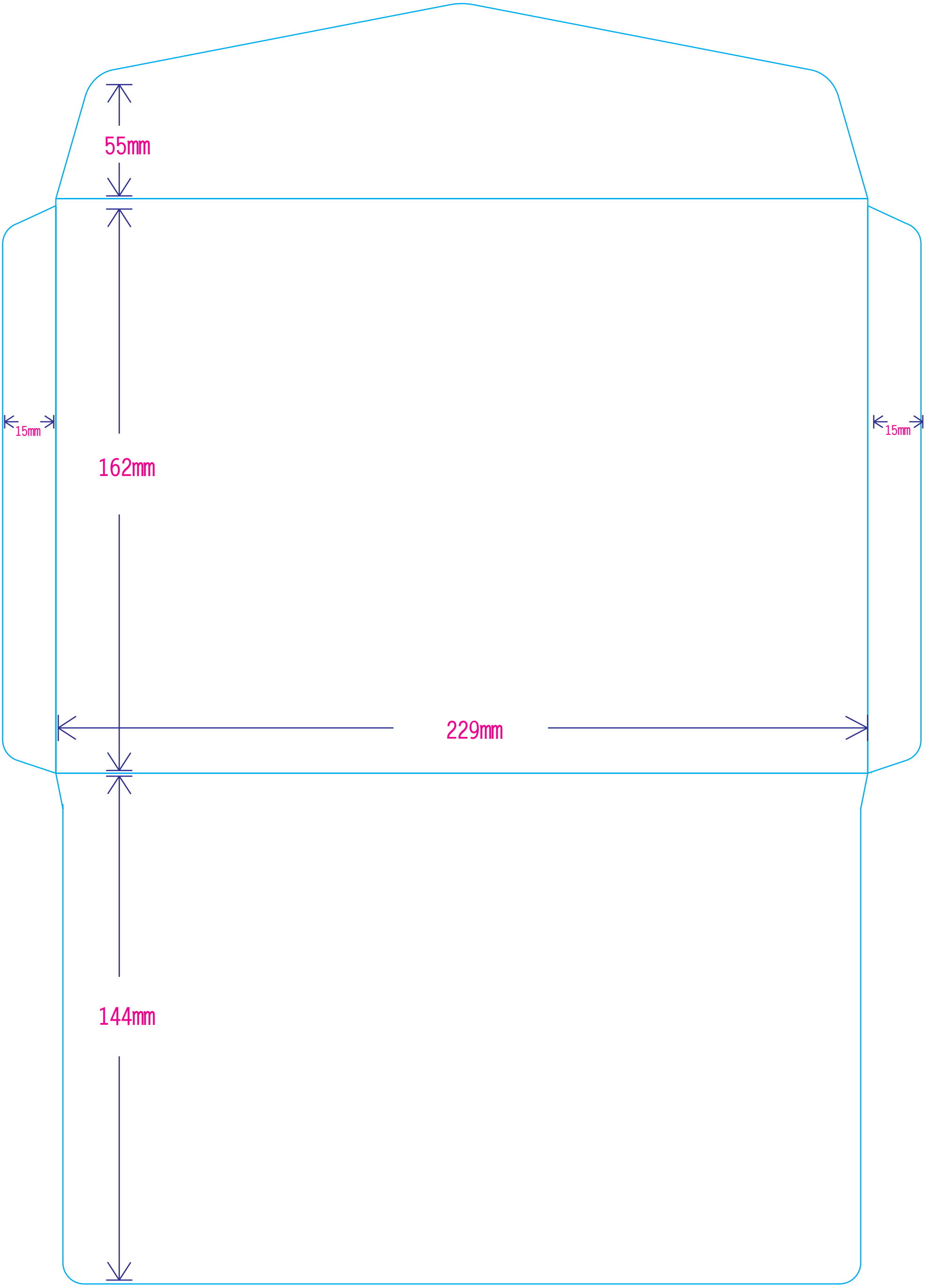
55mm
15mm
15mm
162mm
229mm
144mm